crosswater

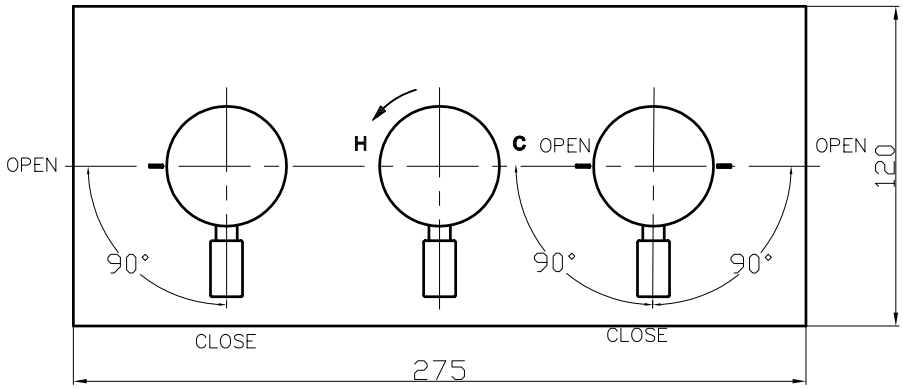

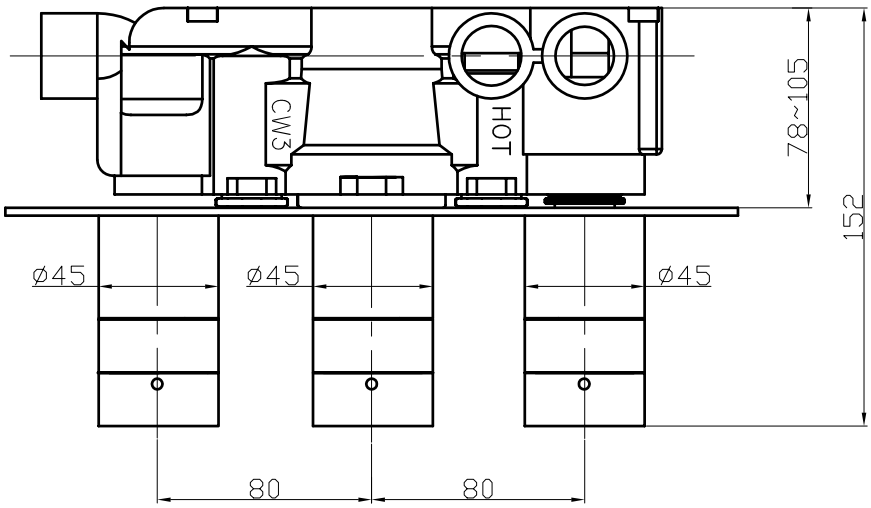

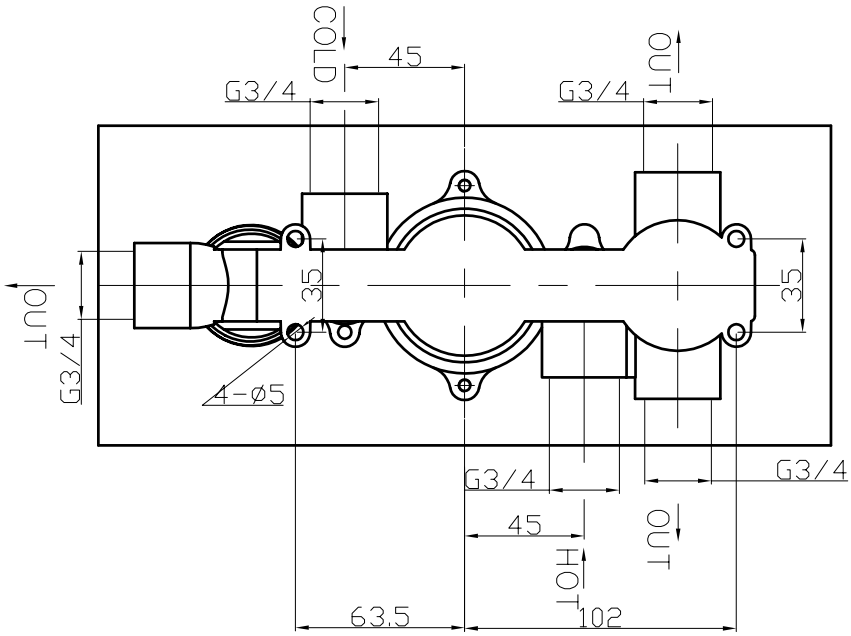

DE3001RC - DESIGN THERMOSTATIC SHOWER VALVE 3 Way Diveter